Part names

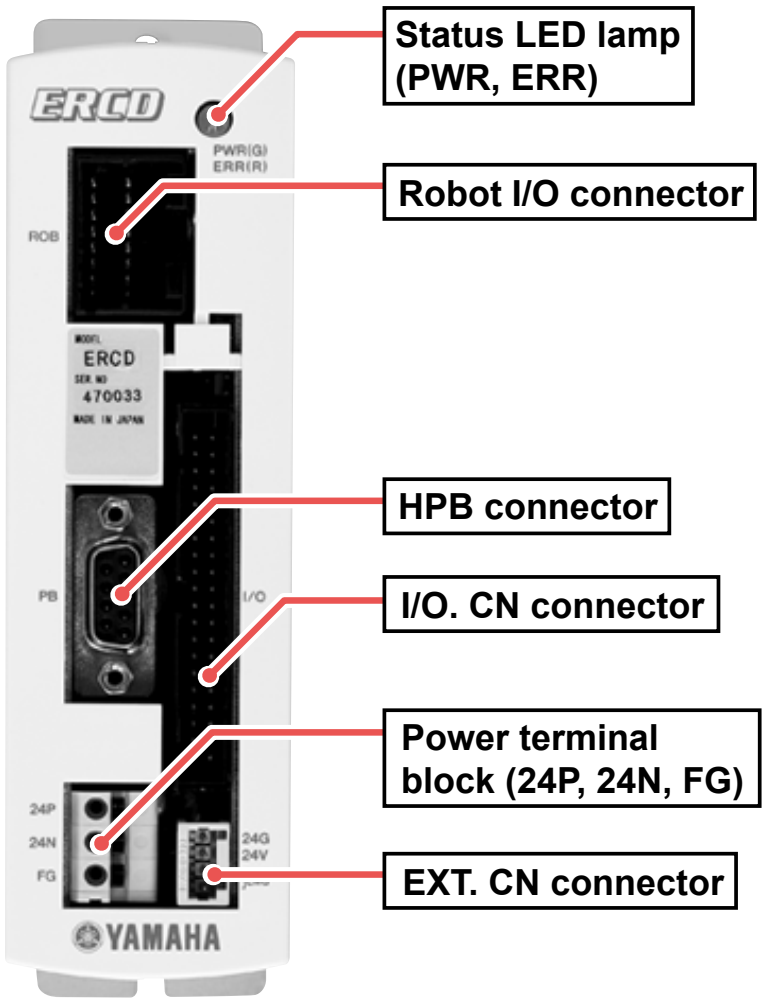
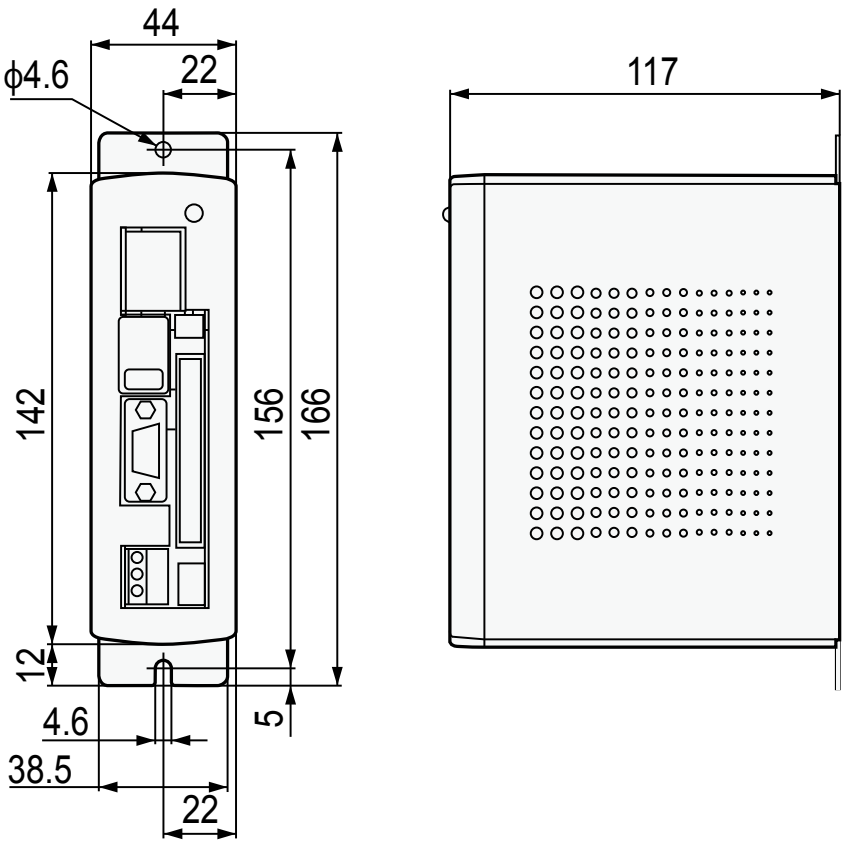
Dimensions